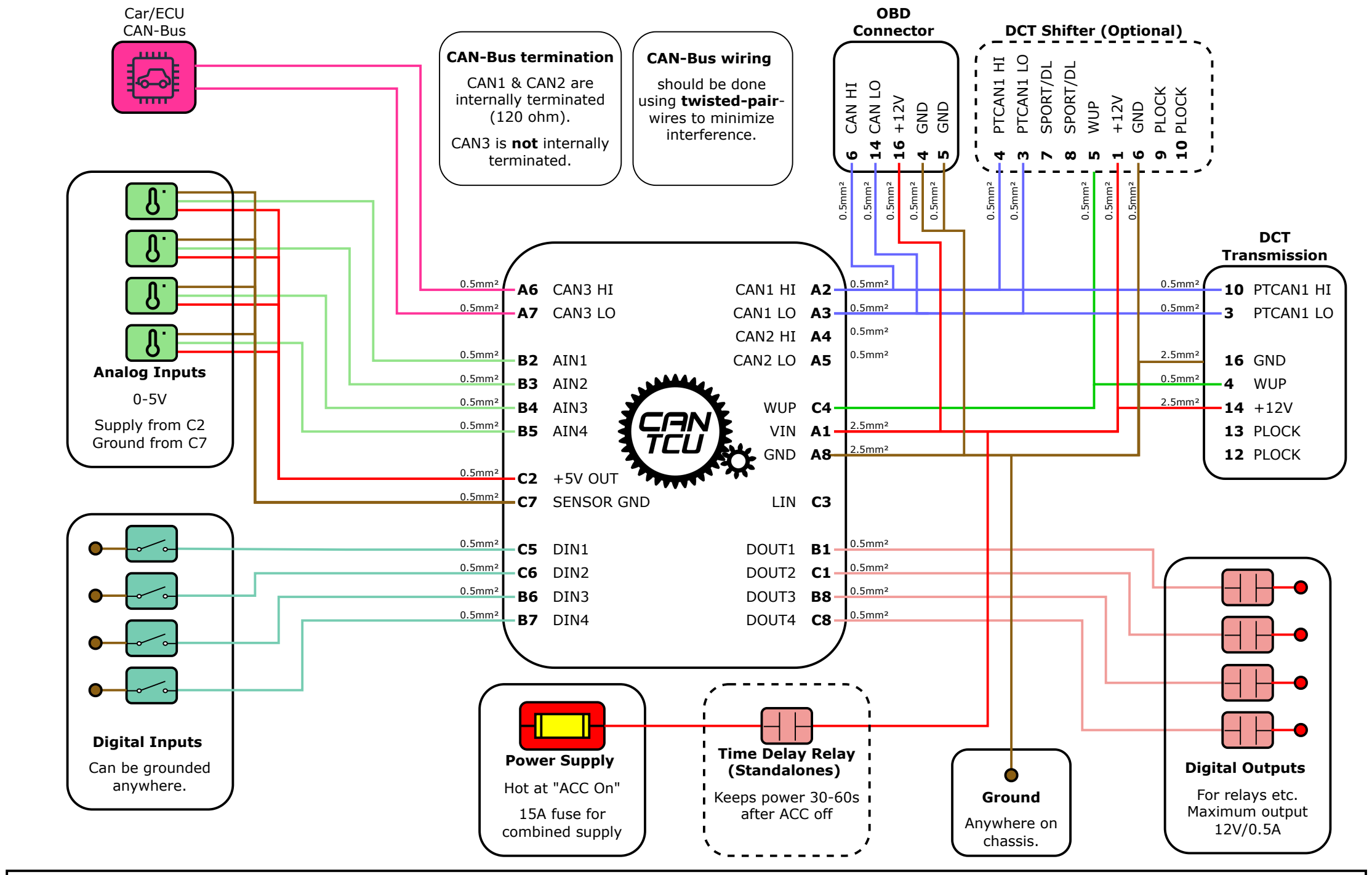

CANformance ENGINEERING

E-DCT Wiring Diagram

HW v1.5
24.4.2023

wiki.canformance.net